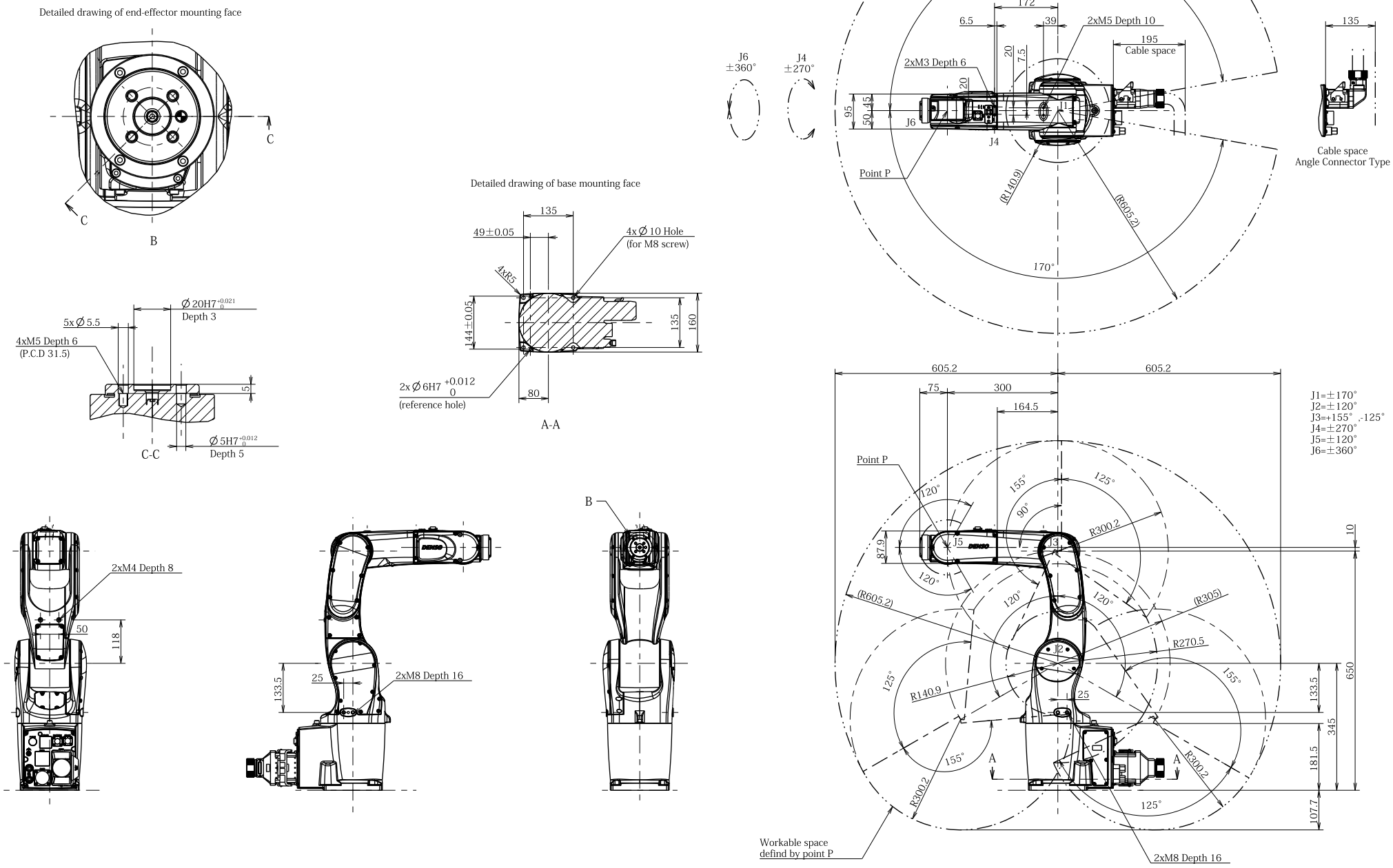VS-060 (Rear Connector Panel, Standard Flange, Cleanroom (class 5 cleanliness-ISO 14644-1)
410590-3540
VS-060 (Rear Connector Panel, Standard Flange, Cleanroom (class 3 cleanliness-ISO 14644-1)
410590-3700