VS-050 (Bottom Connector Panel, Standard Flange)
410590-3550

Detailed drawing of end-effector mounting face

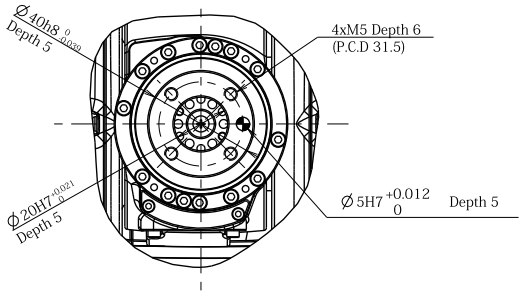

Detailed drawing of base mounting face

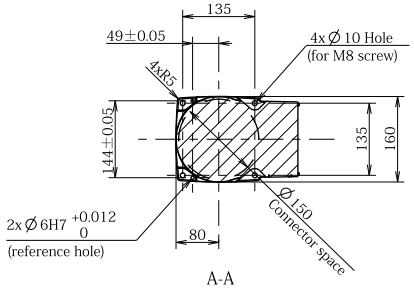

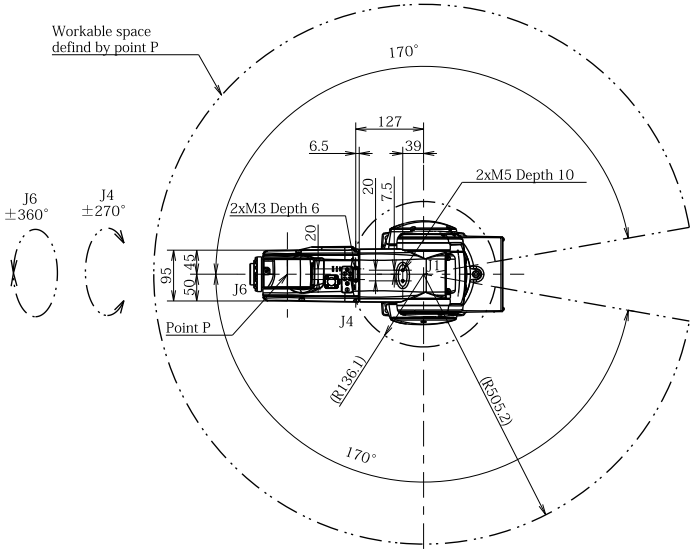

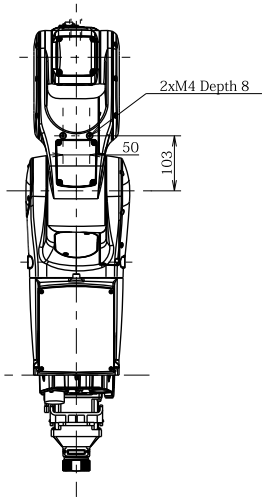

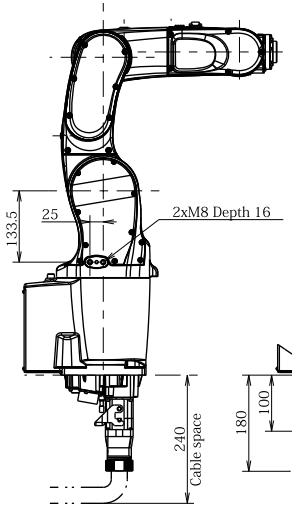

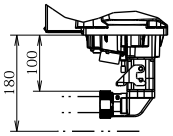

Cable space
Angle Connector Type

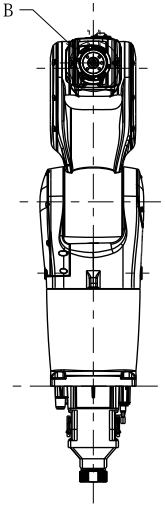

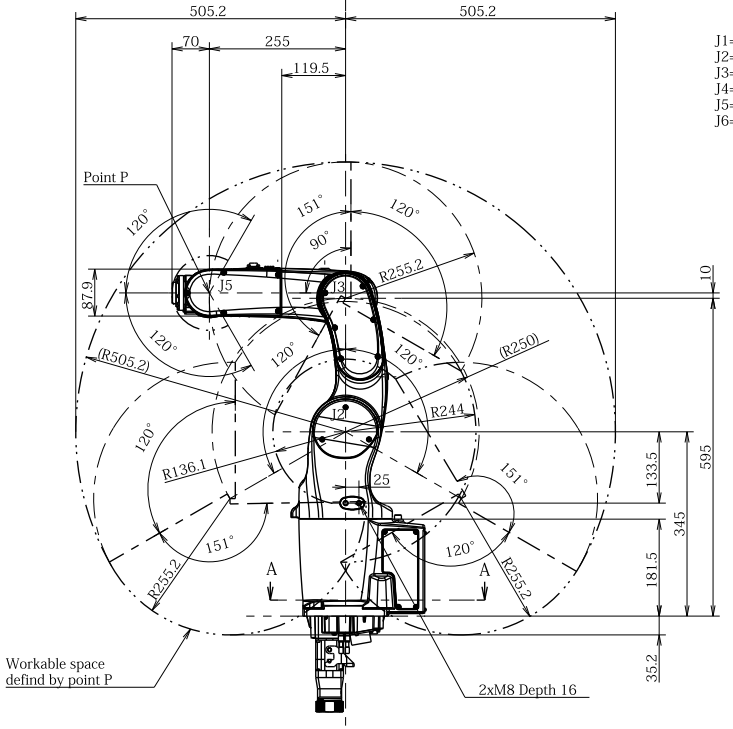

J1=±170°
J2=±120°
J3=+151°,-120°
J4=±270°
J5=±120°
J6=±360°