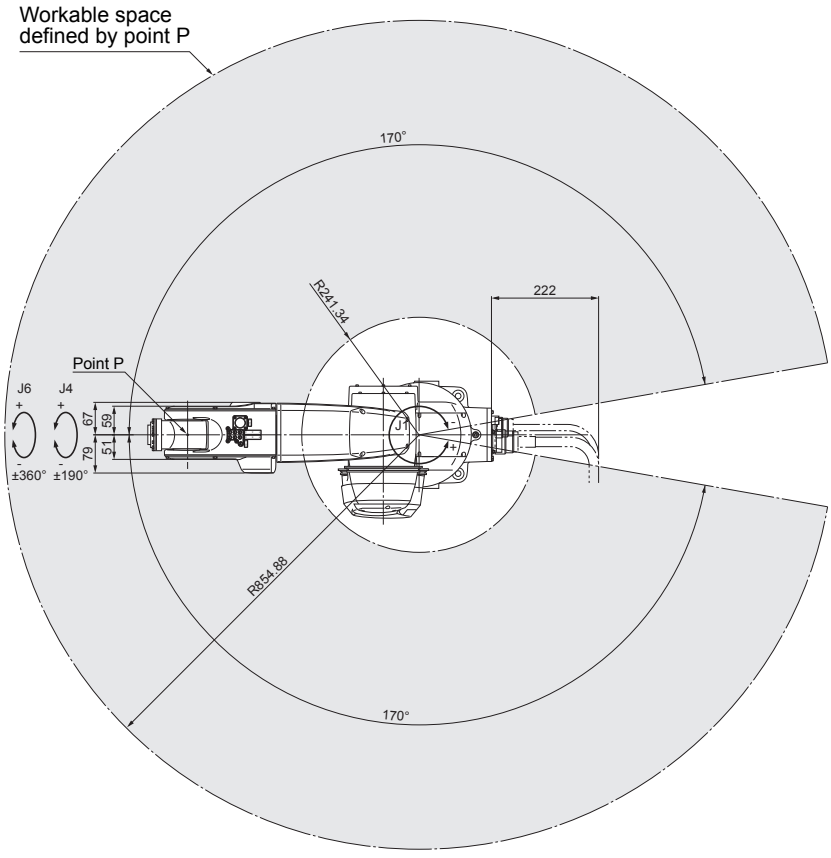
Workable space
defined by point P
170°
R241.34
222
Point P
J6
J4
67
59
79
51
J1
±360°
±190°
R854.88
170°

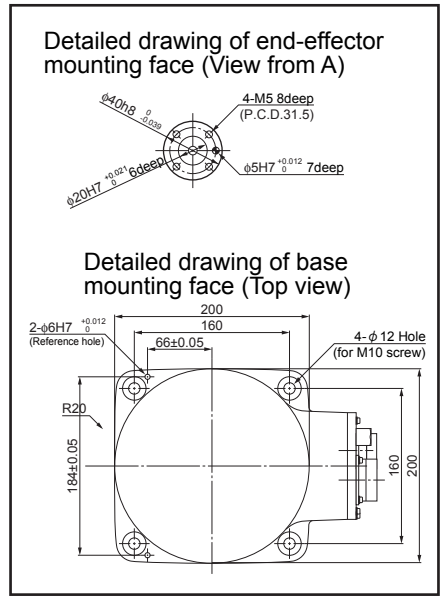
Detailed drawing of end-effector
mounting face (View from A)
ϕ40h8 0 -0.039
4-M5 8deep
(P.C.D.31.5)
ϕ5H7 +0.012 0 7deep
ϕ20H7 +0.021 0 6deep
Detailed drawing of base
mounting face (Top view)
200
160
2-ϕ6H7 +0.012 0
(Reference hole)
66±0.05
4-ϕ12 Hole
(for M10 screw)
R20
184±0.05
160
200

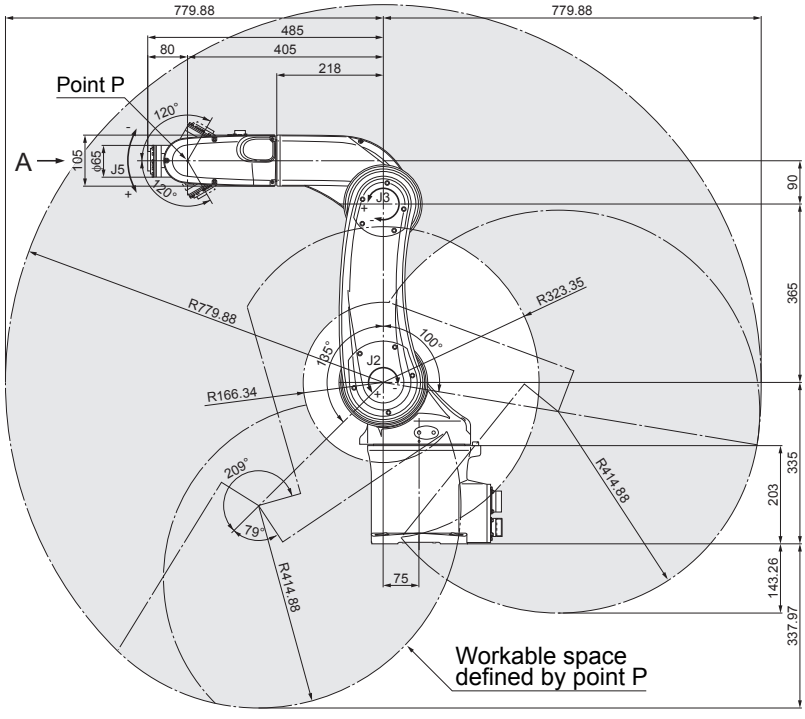
779.88
779.88
485
80
405
218
Point P
120°
A
105
ϕ65
J5
120°
J3
90
365
R779.88
R323.35
135°
100°
J2
R166.34
335
203
R414.88
209°
79°
R414.88
75
143.26
337.97
Workable space
defined by point P