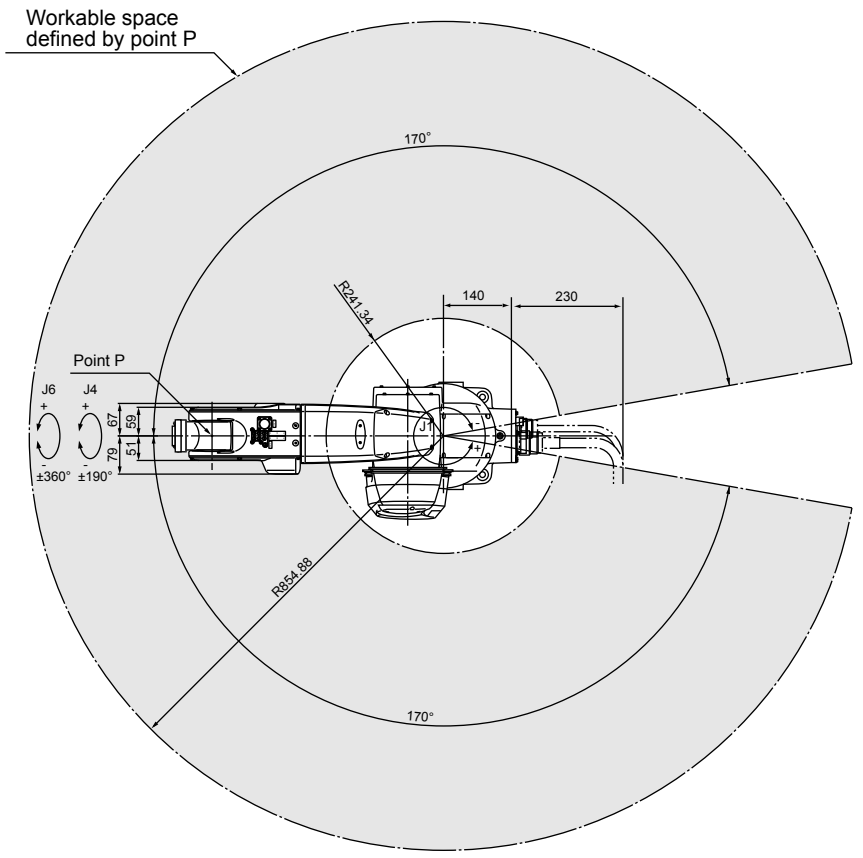
Workable space
defined by point P
170°
R241.34
140
230
Point P
J6
J4
67
59
51
79
±360°
±190°
J1
R854.88
170°

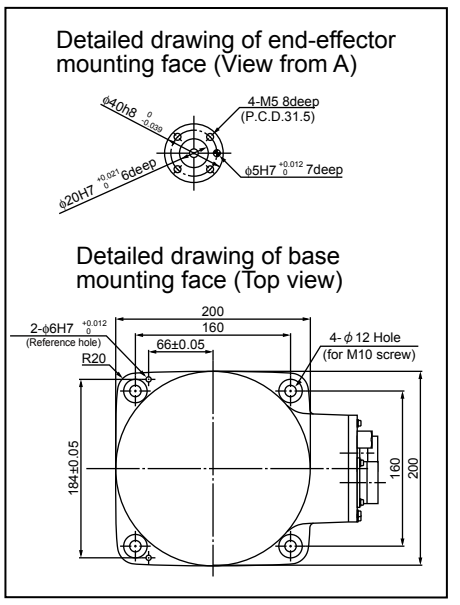
Detailed drawing of end-effector
mounting face (View from A)
4-M5 8deep
(P.C.D.31.5)
6deep
7deep
Detailed drawing of base
mounting face (Top view)
200
160
66±0.05
2-φ6H7
(Reference hole)
R20
4- φ 12 Hole
(for M10 screw)
184±0.05
160
200

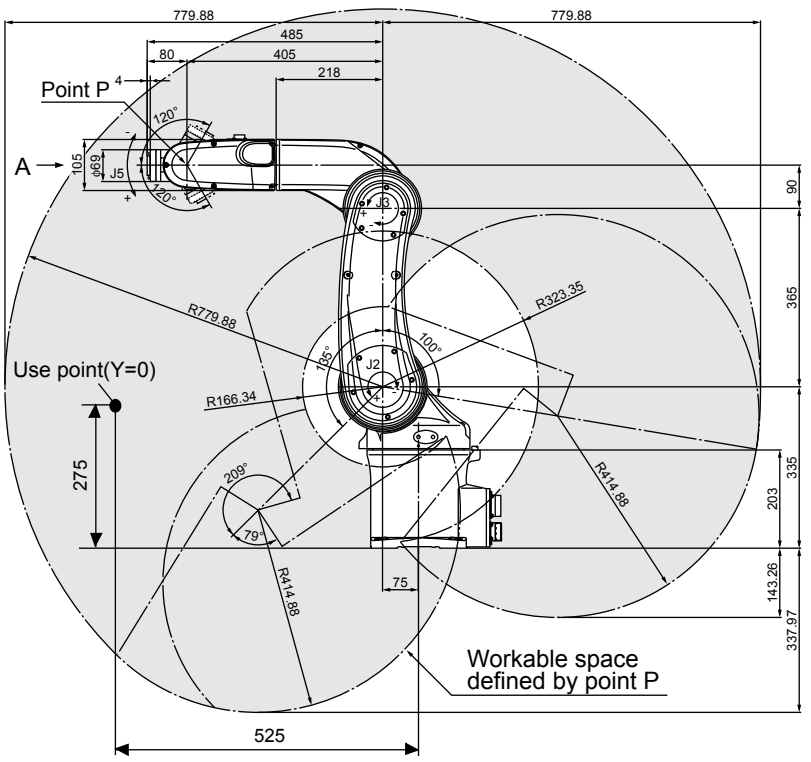
779.88
779.88
485
80
405
218
Point P
4
120°
A
105
69
J5
120°
J3
90
365
R779.88
R323.35
100°
135°
J2
Use point(Y=0)
R166.34
275
209°
79°
R414.88
R414.88
335
203
143.26
337.97
75
Workable space
defined by point P
525