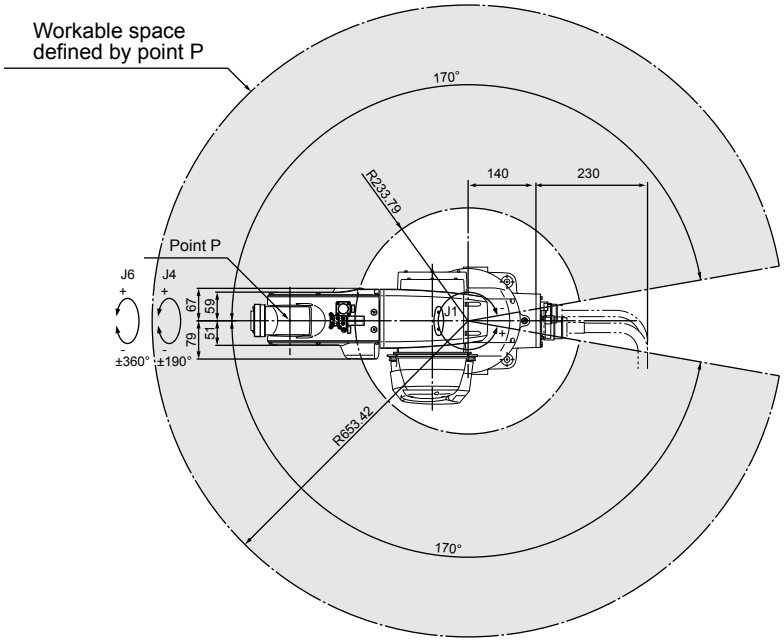
Workable space
defined by point P
170°
140
230
R233.79
Point P
J6
J4
67
59
51
79
J1
±360°
±190°
R653.42
170°

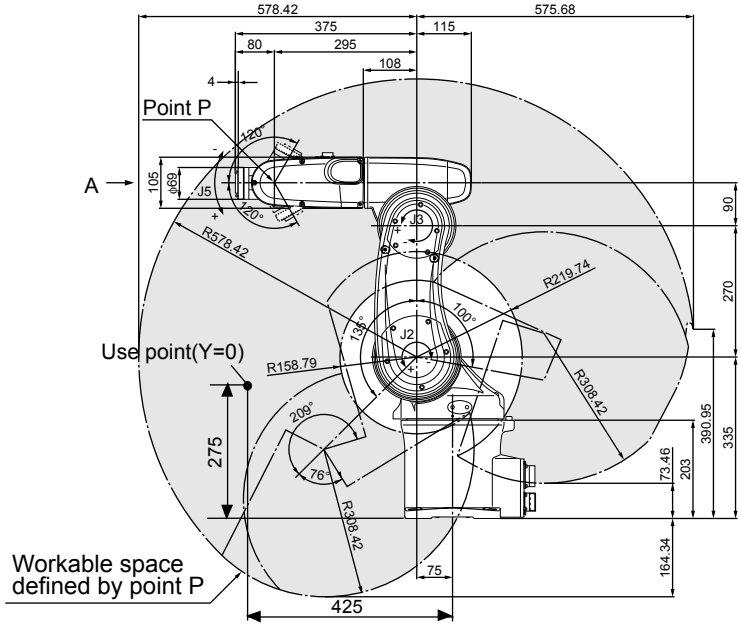
578.42
575.68
375
115
80
295
108
4
Point P
120°
A
105
φ69
J5
120°
J3
90
R578.42
R219.74
270
100°
135°
J2
Use point(Y=0)
R158.79
R308.42
390.95
335
275
209°
76°
73.46
203
R308.42
164.34
75
Workable space
defined by point P
425

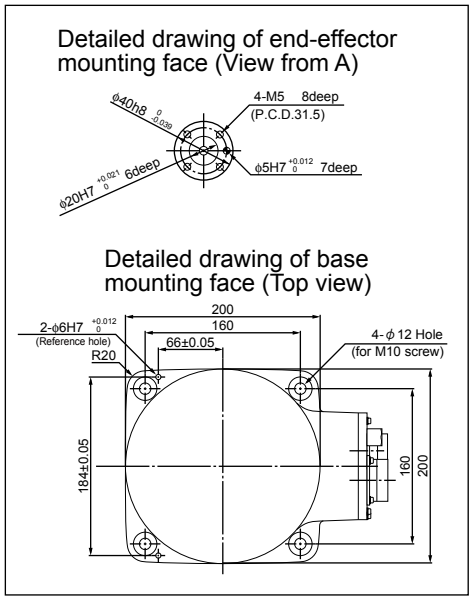
Detailed drawing of end-effector
mounting face (View from A)
φ40h8 0 -0.039
4-M5 8deep
(P.C.D.31.5)
φ20H7 +0.021 0 6deep
φ5H7 +0.012 0 7deep
Detailed drawing of base
mounting face (Top view)
200
160
2-φ6H7 +0.012 0
(Reference hole)
66±0.05
4-φ12 Hole
(for M10 screw)
R20
184±0.05
160
200